Aspects of Computing and Software in a HEP experiment

Simona Rolli

Simona Rolli
Tufts University

Introduction

Over the past ~12 years I have been involved in several software projects while being a member of the CDF collaboration at FNAL

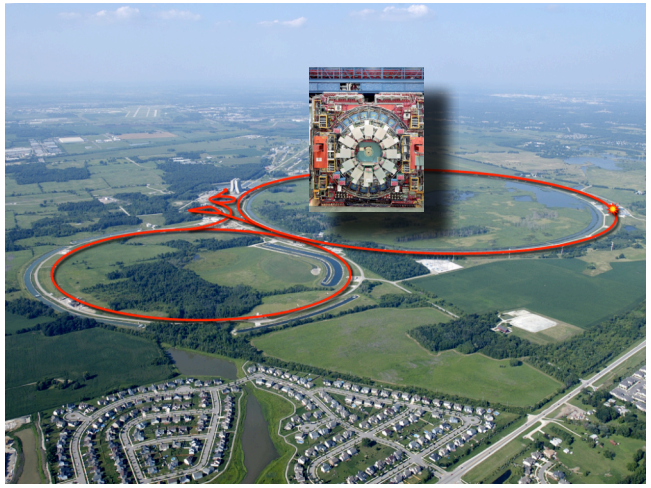

- **Over the lifetime of CDF II, the needs of the experiment changed:**
  - **The collaboration decided to rewrite all of our software in C++ ;**
  - **We faced the task of organizing very large amount of data, that needed to be readily accessible to the whole collaboration**
    - **Some of the GRID concepts did not even exist in 1997;**
  - **We commissioned the detector with new hardware and software**
    - **more than a simple upgrade, more like a new detector**
  - **We finally reached a steady state**
    - **Most of the tasks are now being *automated* to compensate for shortage of manpower**

Simona Rolli
Tufts University

Outline of the talk

- A new beginning: from Fortran to C++
  - Data handling solutions based on OO databases
  - THE CDF Hybrid solution
- Data Access and Analysis
  - Standard ntuples and unified analysis tools
- Simulation and Reconstruction
  - Trigger Simulation at CDF
    - Offline tool
    - Online tool
- The Steady state
  - Automatic Tools for perfomance and ID calculations

Simona Rolli
Tufts University

A new beginning….

At CHEP 1994 a new Word began spreading in the HEP community….

One of the results of the conference was the decision in the few subsequent years on the part of many experiments to write their software in an object oriented fashion

CDF and D0 found themselves in a frenzy being in the middle of a major upgrade from Run I to Run II.

CDF decided to proceed in the following way…..

Simona Rolli
Tufts University

CDFII Software Setup

- Online systems would be using Java for boards control GUI and Run Control (C code is mostly used to talk to the boards, it easily translated in C++ for emulation/simulation);

- Offline software(simulation and reconstruction) would be totally written in C++;

- The data handling (very large volume of data) would be based on the use of the ROOT data format coupled to a relational databases to make up for catalogue functionality (file-based catalogue).

- The analysis framework choice would be left to the user (HepTuple interface)
  - Eventually a few standard ntuples became the tool of choice for most of the collaboration physics analysis groups

Data Handling and Analysis Access

Simona Rolli
Tufts University

Data handling challenges

Estimated run II needs for CDF/D0

Category	Parameter	DØ	CDF
DAQ Rates	peak rate	53 Hz	75Hz
	equivalent DC rate averaged over the year	20 Hz	28Hz
	average event size	250 kB	250 kB
	average data rate	5 MB/s	7 MB/s
	level 2 output	800 Hz	300 Hz
	maximum data logging bandwidth	scalable	80 MB/s
Data Storage	number of events	600 M/year	900 M/year
	RAW data	150 TB/year	250 TB/year
	reconstructed data STA(DØ)/DST(CDF)	75 TB/year	135 TB/year
	physics analysis data DST(DØ)/PAD(CDF)	50 TB/year	79 TB/year
	μDST	3 TB/year	-
	total data volume	280 TB/year	464 TB/year
CPU:	reconstruction/event	1000-2500 MIPS-s/event	1200 MIPS-s/event
	reconstruction	34,000 - 83,000 MIPS	56,000 MIPS
	analysis	60,000 - 80,000 MIPS	90,000 MIPS
Software	event database	required	required
	process control	required	required
	storage management	required	required
	secondary databases	required	required

Table 1: Summary of estimated Run II needs for CDF and DØ. Storage needs are on a yearly basis.

- **Data access questions:**
  - **what event we look at:**
    - **Data**
    - **Calibration and support**
    - **simulation**
  - **how to select events**
  - **what processing steps needed for event selection/event analysis**
  - **how many time and how often data are accessed?**
  - **Which piece of the events are needed?**

S. Rolli et al. Objectivity WorldView, S. Clara, May 1997

Simona Rolli
Tufts University

OODBMS Data handling

One of the proposals for CDF was based on the solution being worked out for the LHC experiments

- Split the event information in different parts, residing on different media, depending on the access patterns, maintaining associations
  - AOD on disk
  - ESD on tape
  - RAW on tape
- Use direct access to access needed information
- Use an OODBMS as object manager (off-the-shelf system)
- Possible serious drawbacks when using serial media (tape)

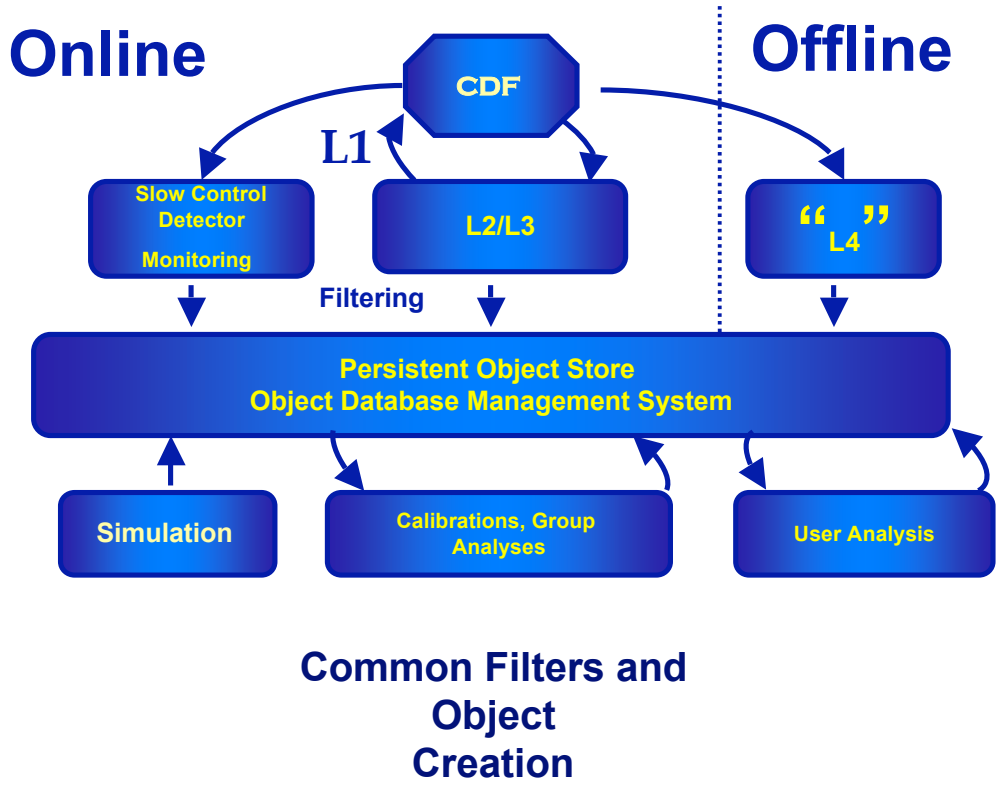

K. Karr, S. Rolli, K. Sliwa CDF data management in Run-II and Objectivity ODBMS CDF/ANAL/CDF/PUBLIC/4201, 1997

Simona Rolli
Tufts University

CDF Data access and data handling

The solution CDF adopted was an hybrid one:
It uses the file format of ROOT, an HEP specific data analysis framework, as its data format (sequential), but builds an intermediate layer (Event Data Model) which allows OO functionality.

DH makes use of a relational database to make up for catalogue functionality (file-based catalogue).

Data are kept on a tape robot and spooled on disk upon request.
No direct tape access

Reco Data are also kept in an extremely highly compressed format
(Physics Analysis Data, PAD's).

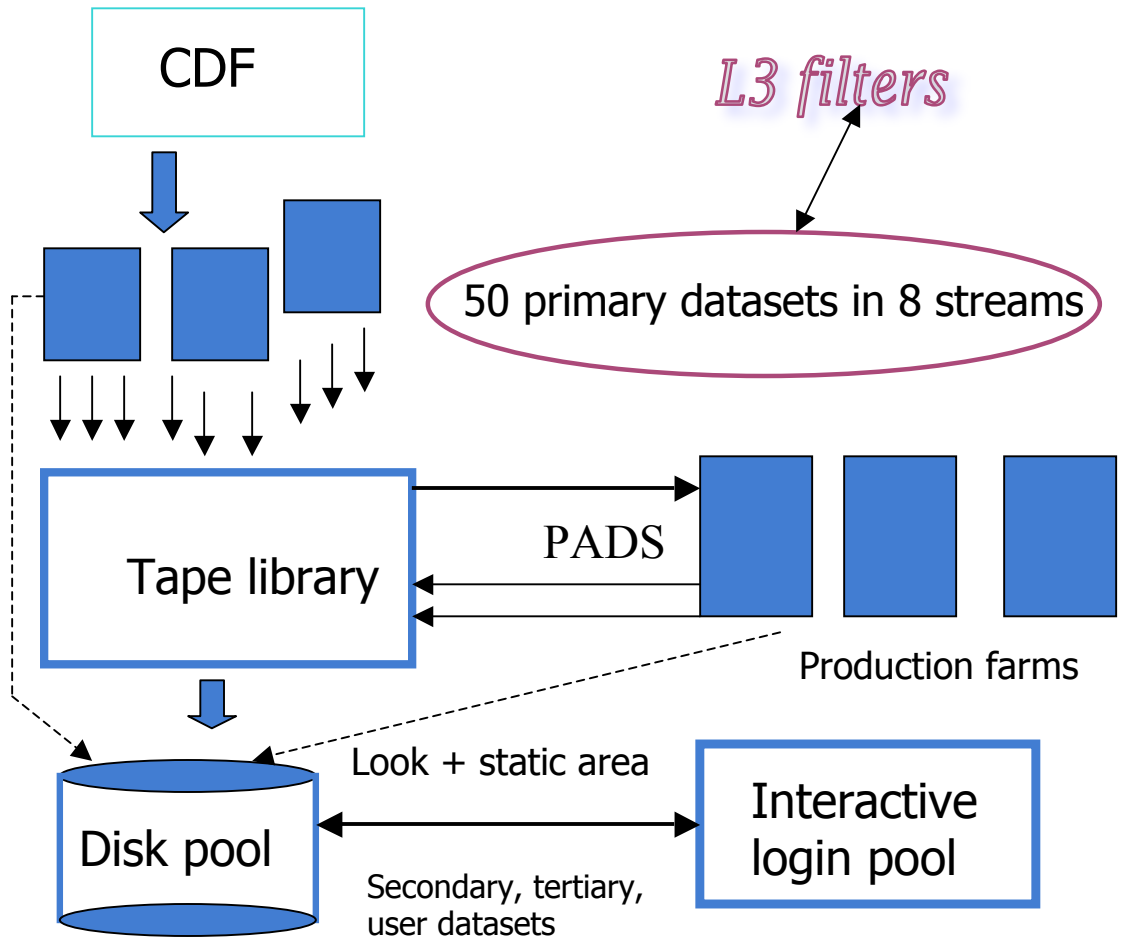

Simona Rolli
Tufts University

CDF Event Data Model

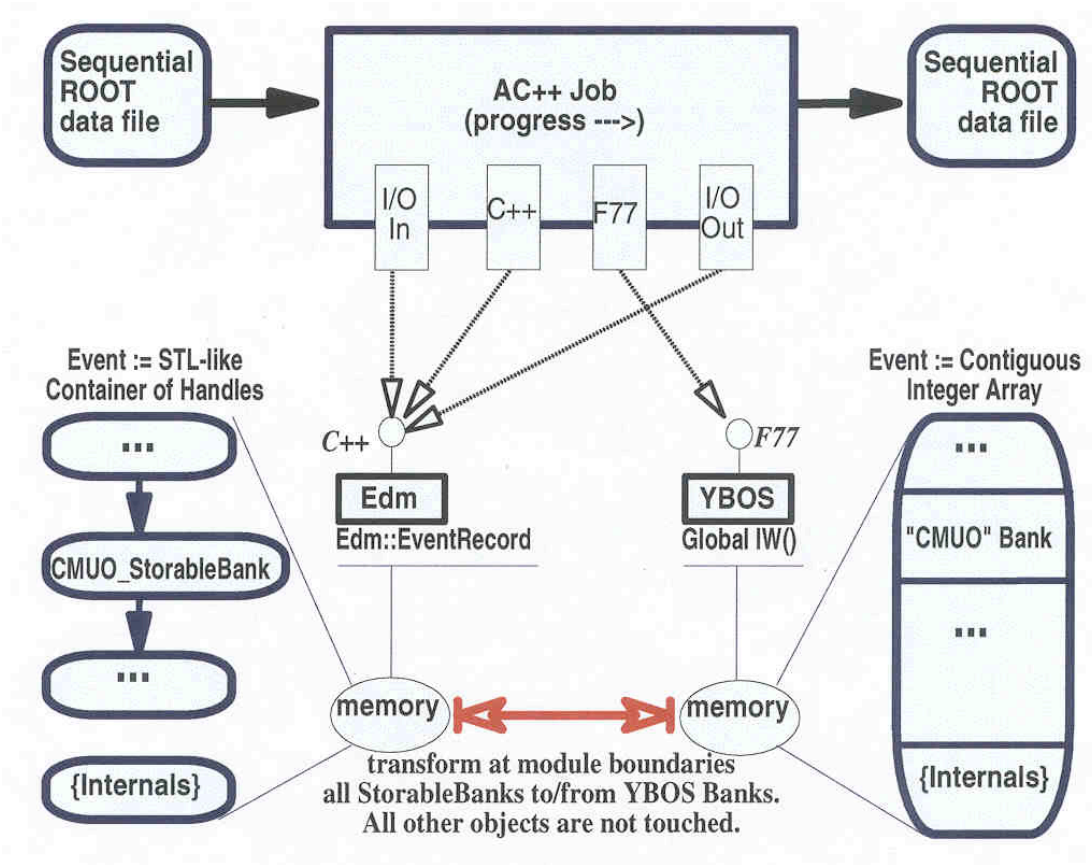

R. Kennedy, S. Rolli et al. CHEP 2000, Computing in high energy and nuclear physics p442.

Simona Rolli
Tufts University

Data Analysis Model at CDF

PADS data files are not directly readable in the ROOT analysis framework
Data need to be "puffed" using the EDM intermediate layer (dictionary description) to be used in an analysis framework

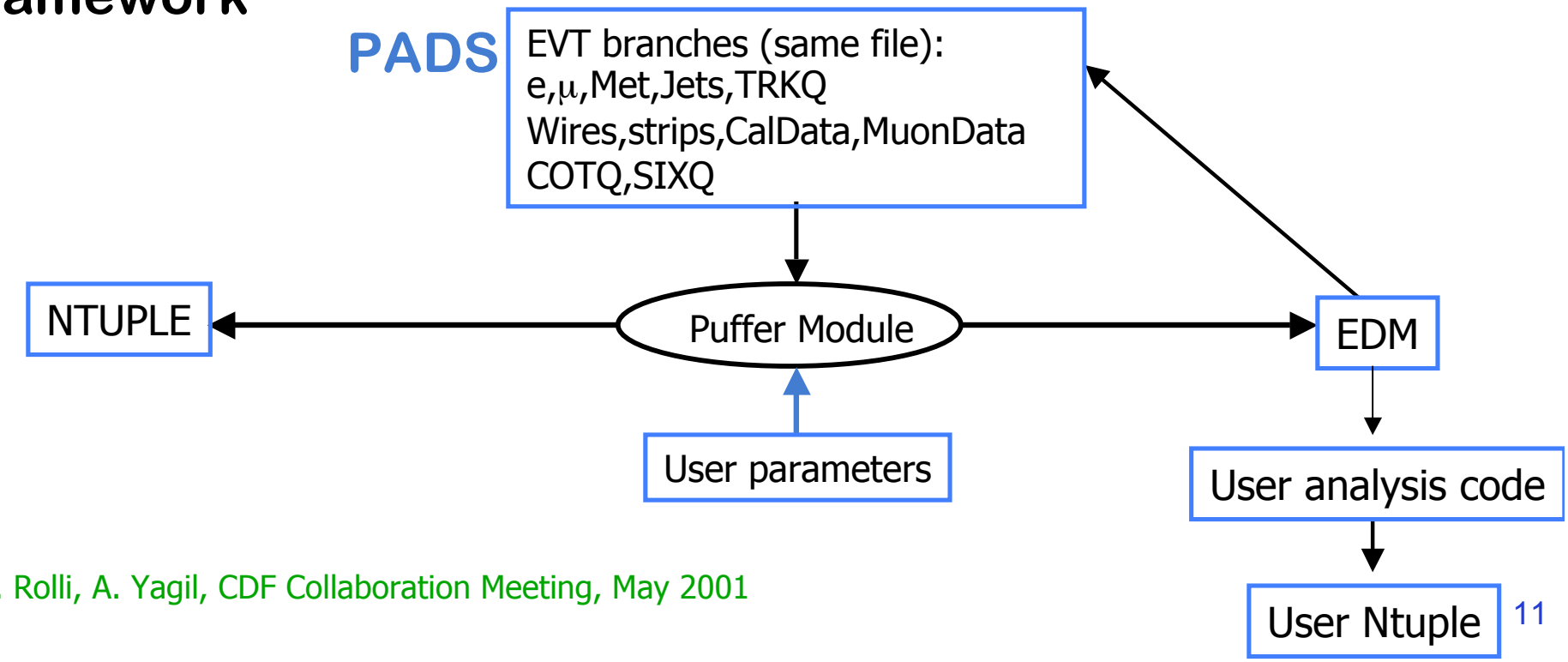

S. Rolli, A. Yagil, CDF Collaboration Meeting, May 2001

Simona Rolli
Tufts University

evtNtuple

The PADS Event information is translated into ROOT branches:

- High Level Objects
- Trigger Information
- Raw Data Information
- Simulated information

The User can add his/her own branch for specific analysis needs (derived quantities)

The ntuple is portable outside of the CDF software environment (the User laptop..)

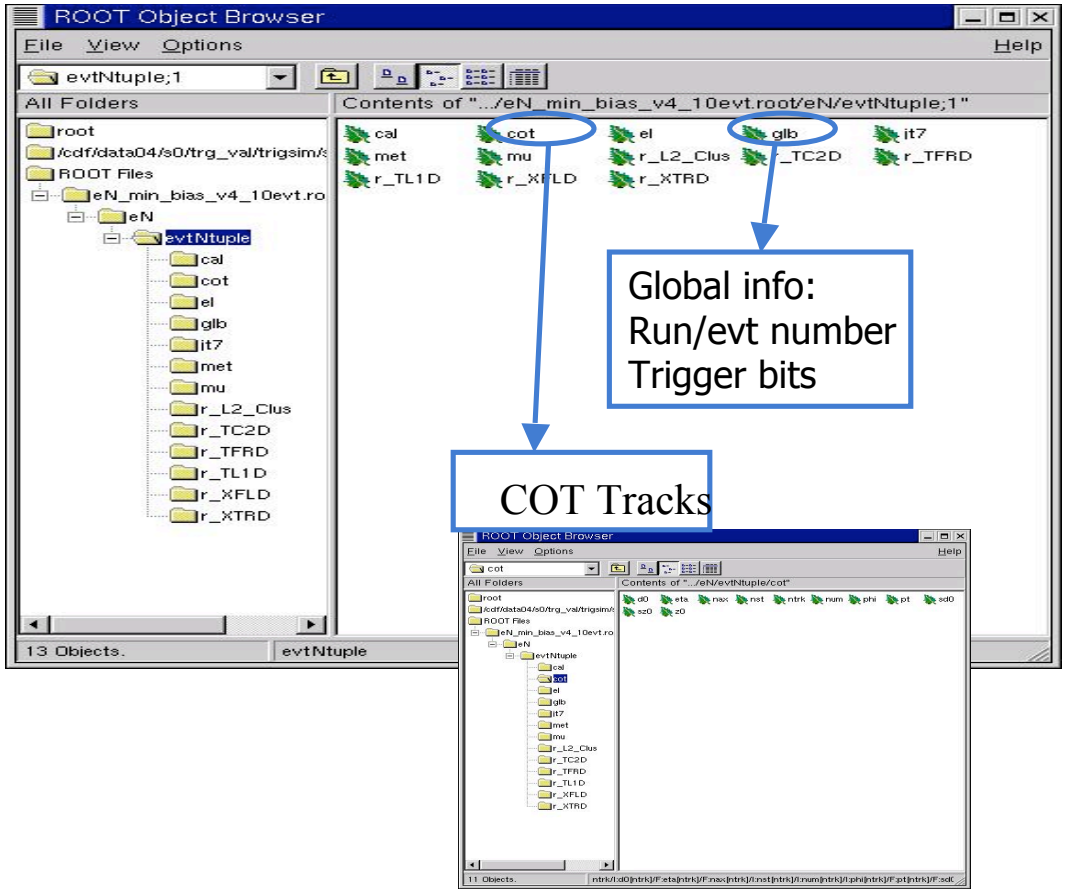

http://ncdf70.fnal.gov:8001/talks/eN/eN.html

One of the analysis tools used in CDF

Simulation and Reconstruction: Trigger Simulation

Simona Rolli
Tufts University

Trigger System at CDF

The collision rate at the Tevatron is several orders of magnitude larger than the rate at which data can be stored onto tape.

CDF uses a three level trigger system to extract meaningful physics events from the large number of min-bias events.

L1 and L2 are implemented via custom designed hardware boards
L3 is software

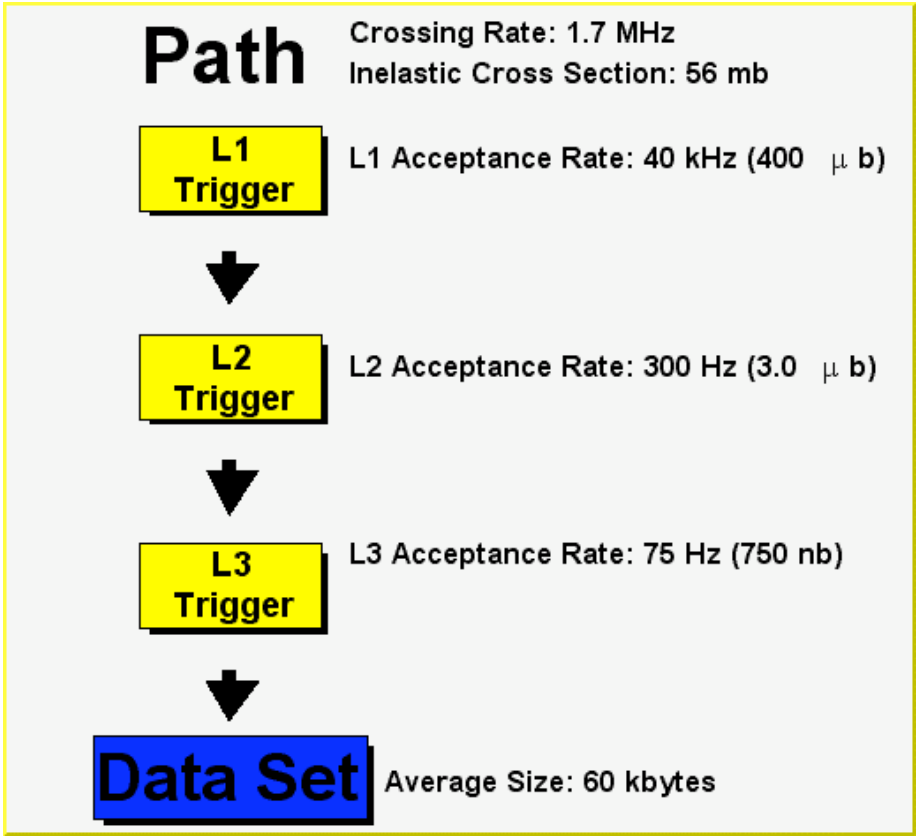

Simona Rolli
Tufts University

Trigger Simulation

- **TRGSim++ is a set of C++ packages which emulate the L1 and L2 hardware trigger levels decision steps**
  - **offline tool to calculate rates and efficiencies**
    - **MC production;**
  - **online monitoring tool for the trigger boards.**
- **TRGSim++ modules run off detector raw data and produce emulated trigger data identical to real hardware data.**
- **Not a time-critical application, more a "static" emulation**

- **Trigger decision steps: AC++ modules, organized in packages:**
  - **CalTrigger**
  - **MuonTrigger**
  - **XFTSim**
  - **SVTSim**
  - **XTRPSim**
  - **L2/L1GlobalTrigger**
  - **TriggerMods**
  - **TriggerObjects**

Coordination of a group of about 30 detector experts

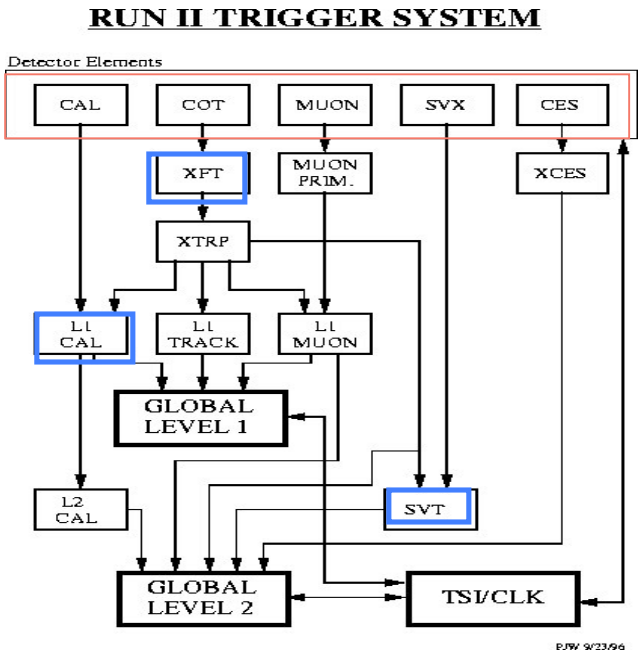

S. Rolli et al., Trigger Simulation at CDF - CHEP 2000,Computing in high energy and nuclear physics* p250

Simona Rolli
Tufts University

The Simulation Code

The simulation code has to adhere to the AC++ philosophy: Modules representing functions talk to each other via data structures (banks -part of the YBOS array, or storable Objects) contained in the EventRecord.

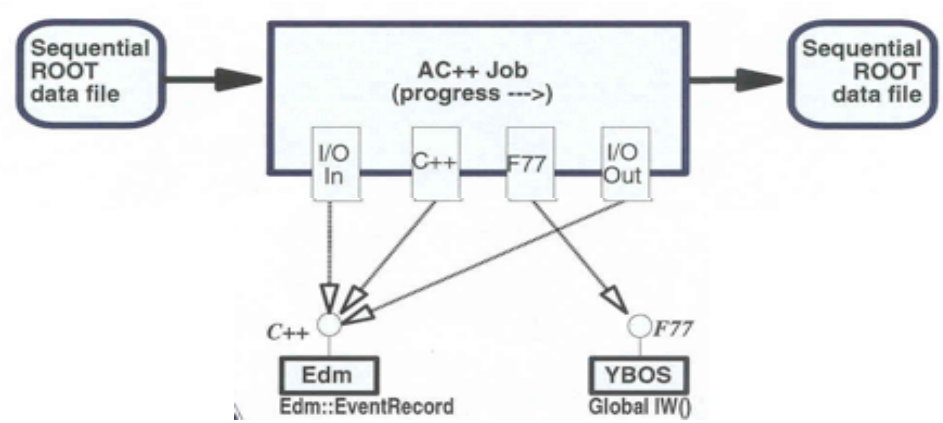

This is also the only part of the CDF simulation/reconstruction code which can reproduce bit by bit the digital hardware behavior. It is essentially code that translate in a higher language the behavior of the trigger boards.

The challenge is to write code which is modular and allows for as much recycling as possible of the online boards (C)code.

Simona Rolli
Tufts University

Example:The Calorimeter Trigger

L1:

Trigger on electrons, photons, jets (object triggers),

total event transverse energy and missing transverse energy (global triggers)

Object triggers : threshold applied to individual towers;

Global triggers : threshold applied after summing energies from all towers.

Two parallel paths in the boards

L2 :

cluster finder and isolation sums

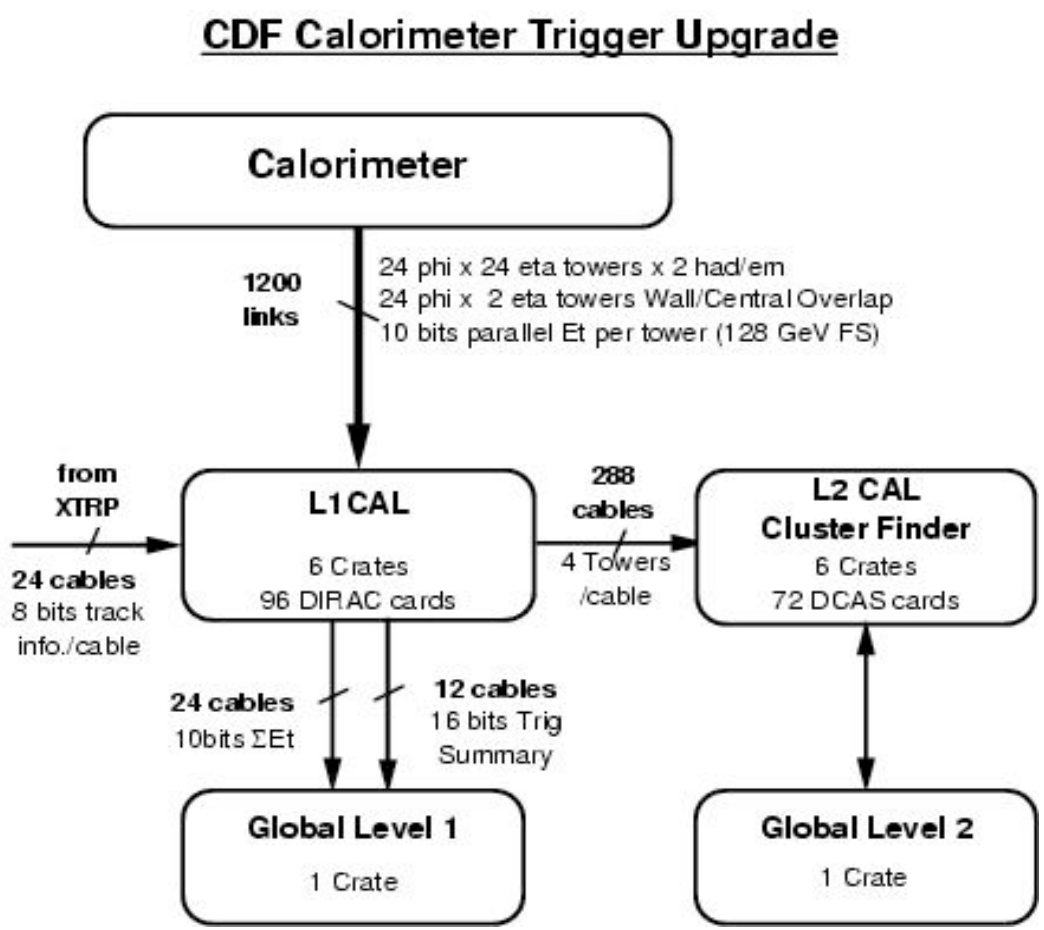

Simona Rolli
Tufts University

Example: L1 Calo Trigger

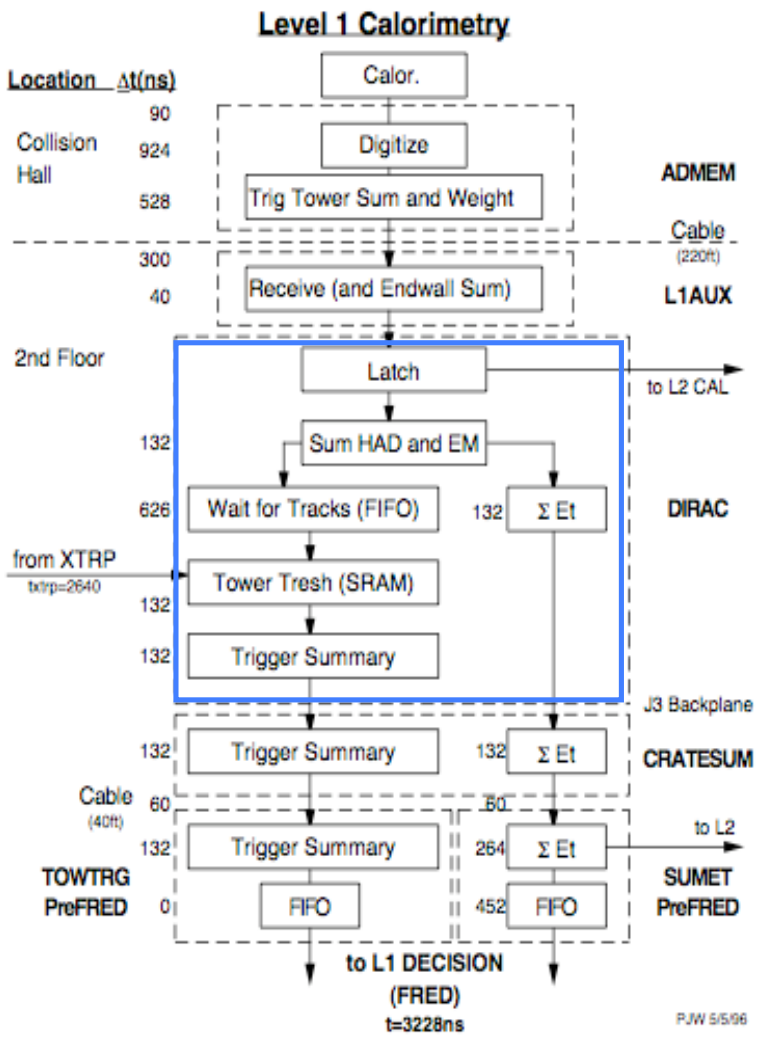


```
class DiracDat {
 private:
    //inputs
   int etin[13];/* the 13 input channels */
   int trin;    /* 8 bits of tracking input */
   //outputs
   int output[12];/* the front panel output to DCAS */
   int daq[4];    /* daq[i] i=word */
   int etsum;   /* 8 et bits sent to cratesum*/
   int trsum;   /* 16 trigger bits sent to cratesum*/
   int slot /* bunch crossing number, slot number */
   int etaux[12]; /* the et out of the aux card */
   int towem[6]; /* the towlat output, 8 bits of em et */
   int lsbhad[6]; /* the towlat outputs for lsbhad(3) */
   int towtot[6]; /* 8 bits of total energy from towlat*/
    ......
}
```

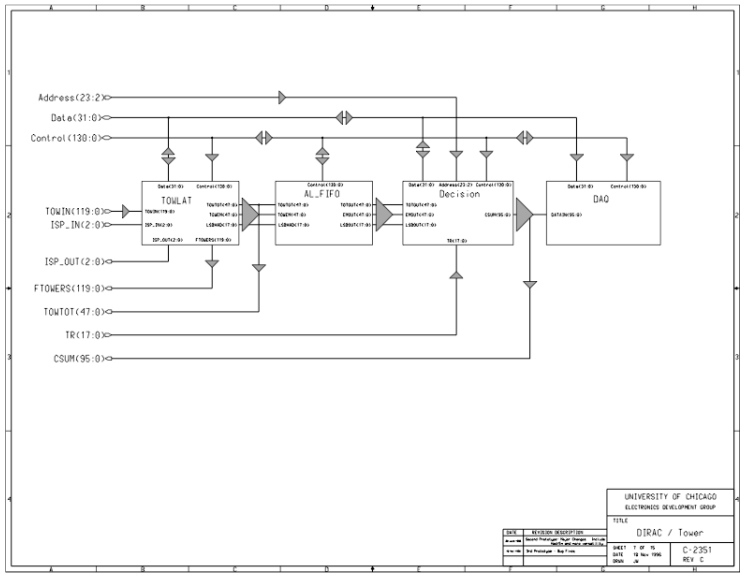

Simona Rolli
Tufts University

DIRAC crates

L1 Dirac boards receive their input from ADMEM (FE boards on the detector):

- 10 bit word for each trigger tower ($15^o\varphi \times 0.2\eta$)

for a total of 24x24 towers

Each card processes 6 HAD and 6 EM towers from a quarter of a wedge in φ.
Therefore each card receive 120 bits from the detector
There are 16 DIRAC cards in each crate
There are 6 DIRAC crates (for 576 Trigger Towers)

There is one Crate Sum board per eight DIRAC boards. CS receives an 8 bit Sumet and 16 bit trigger Summary Word from each DIRAC via a custom backplane

In the code we get the TDC data from the raw data banks, emulate the ADMEM PMT sums and weighting with routines and pass the energies to the Dirac board object, via the etin array of input channels

DIRAC VME Crate

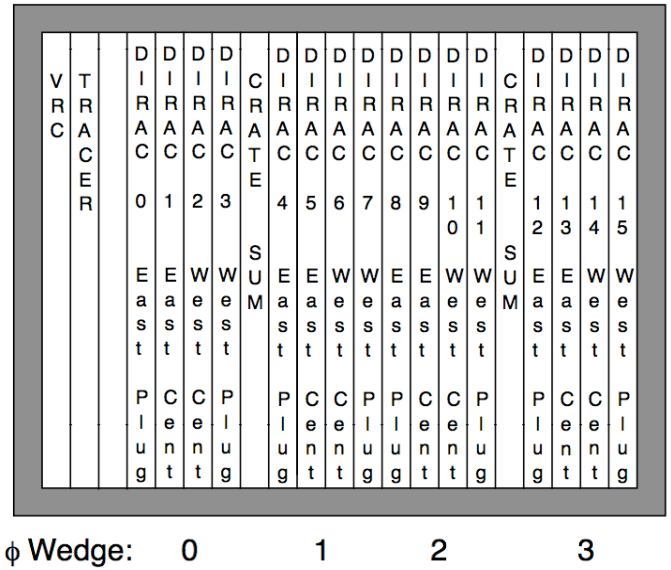

ϕ Wedge: 0 1 2 3

Simona Rolli
Tufts University

CalTrigger package

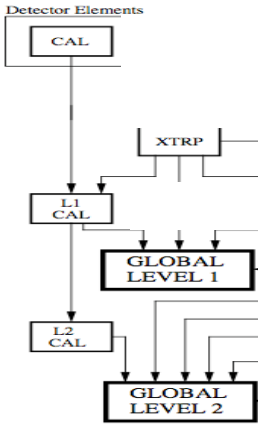

A C++ framework:
Event data is passed via an Event Record between user-written software modules whose execution is coordinated by the AC++/Framework package

AbsEvent

AppModule

StorableObject

CalTriggerDataMaker

generates

CalTriggerData

main object of the calorimeter simulation, it contains the array of trigger towers, arrays of DIRAC boards and CRATESUM boards and quantities resulting from the L1 simulation and L2 clustering and isolation algorithms.

contains common trigger tower information: energies, transverse energies, clustering summary word

DiracDat

TriggerTower

detector-specific trigger tower information (PMT sums).

L1Cal

CratesumDat

TriggerTowerType

Detector digitization (ADMEM), L1 triggers, L2 clustering

Simona Rolli
Tufts University

EXtremely Fast Tracker

Data from the Central Tracker (COT) are processed from each bunch crossing, and the result is available in time <u>to be used in the L1 trigger decision</u>.

- The processor works off hit data from the 4 axial layers of the COT. Data from each wire is classified as prompt or delayed (32K bits) depending on the maximum drift in the COT.
- Track identification is accomplished in two steps: the Finder and the Linker.
- Finder looks for high P_T track segments in the SL
- Linker searches for match among segments

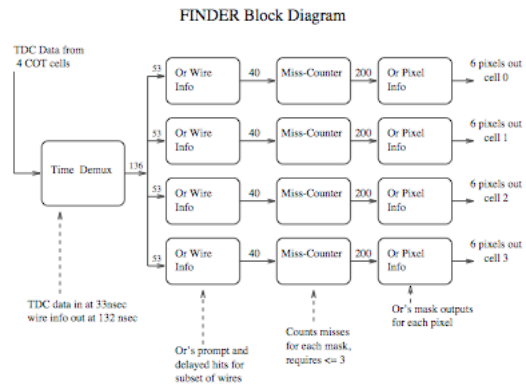

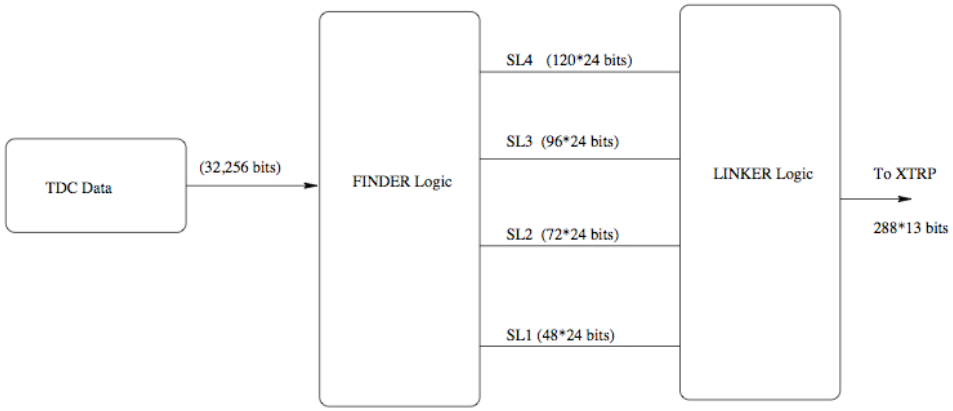

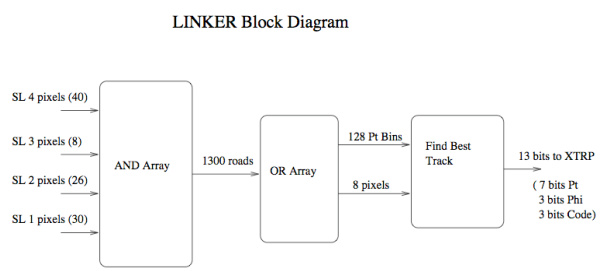

Simona Rolli
Tufts University

XFTSim

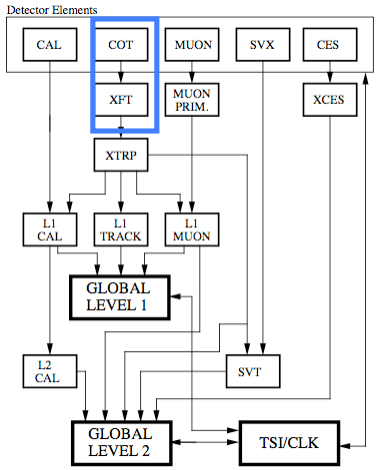

Mez. Card Class ← **XFT System Class** → **Database Class**

Finder System Class

Linker System Class

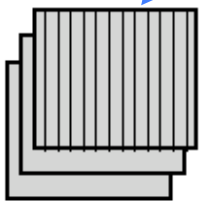

Finder Crate Class: Three are inst. by Finder Sys.

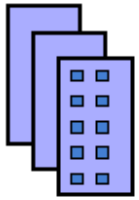

Finder Board Class: 16 are inst. by Finder Crate Class (2 Types of Boards)

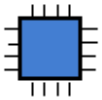

Finder Chip Class: Finder board class inst. nec. number of Finder chips.

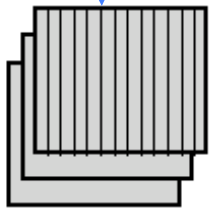

Linker Crate Class: Three are inst. by Linker Sys.

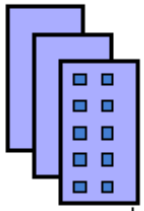

Linker Board Class: 8 are inst. by Linker Crate Class

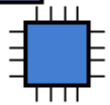

Input Chip Class(6)

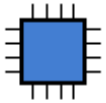

Linker Chip Class(12)

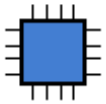

Output Chip Class(2)

Simona Rolli
Tufts University

Secondary Vertex Trigger

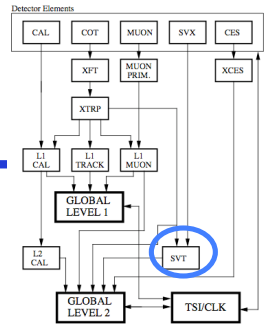

CDF decided to use impact parameter information of the tracks in the trigger to detect secondary vertices as a tool to substantially increase the physics reach of CDF

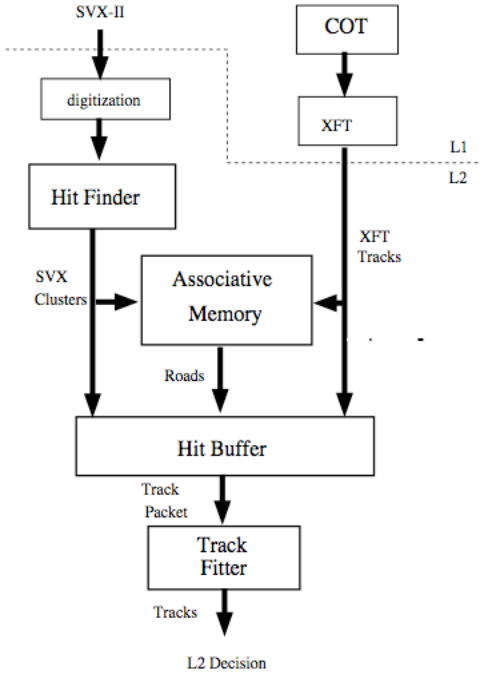

Figure 12.15: Architecture of the SVT trigger.

- **Modular C code , with "board simulator" for each board**
  - **C code needed to *run the same simulators both from TRGSIM and in crate controller CPU's for online diagnostic.***

- **An AC++ module provides the C simulators with Silicon raw data information and XFT reconstructed tracks. It writes out a simulated SVTD_StorableBank (identical to the hardware bank)**

Simona Rolli
Tufts University

Monitoring the trigger online

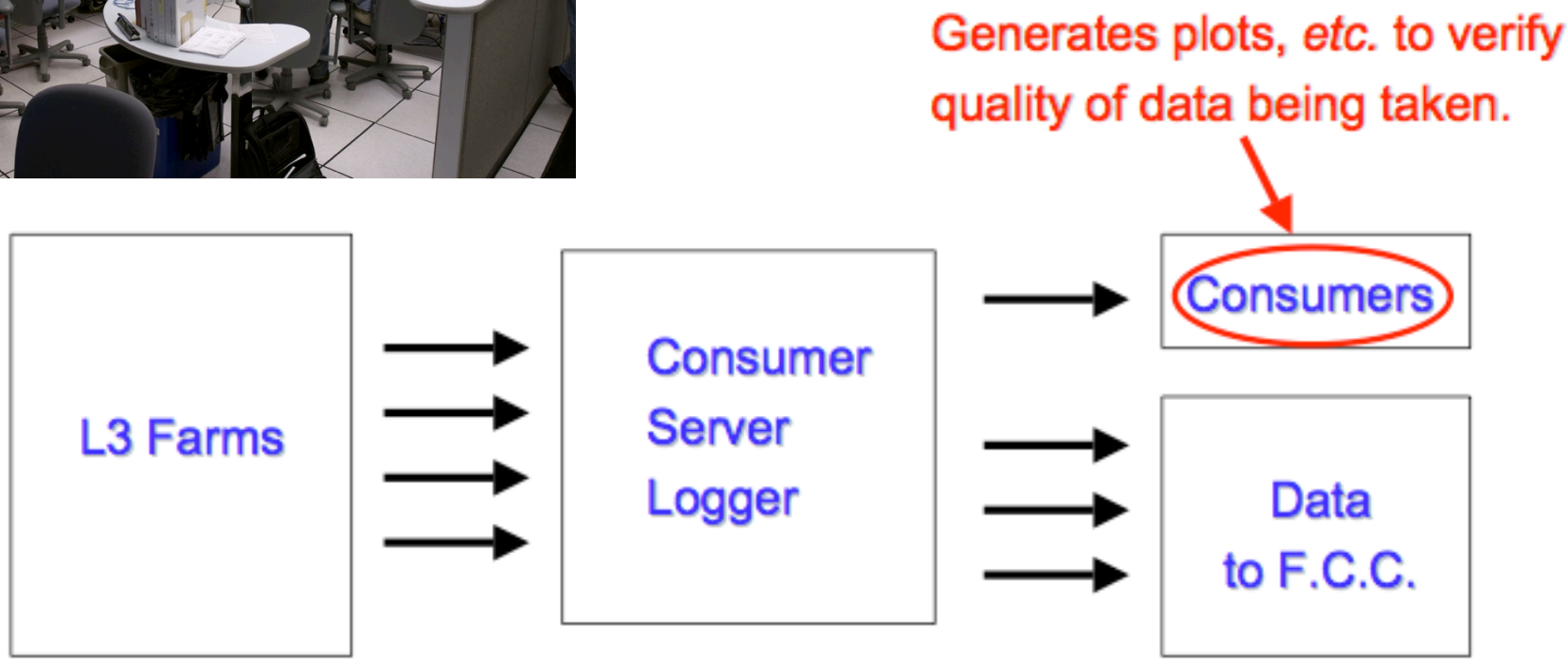

Simona Rolli
Tufts University

Monitoring the trigger online

- Each subsystem driver module contains data monitors methods which check word by word real and simulated banks, firing error messages on the error logger and on the standard output if discrepancy is found

- Summary files produced for every run, control on level of printing
- Easily coupled to the online ROOT-based Consumer Framework (HistoDisplayMain)
- Now also on the Web

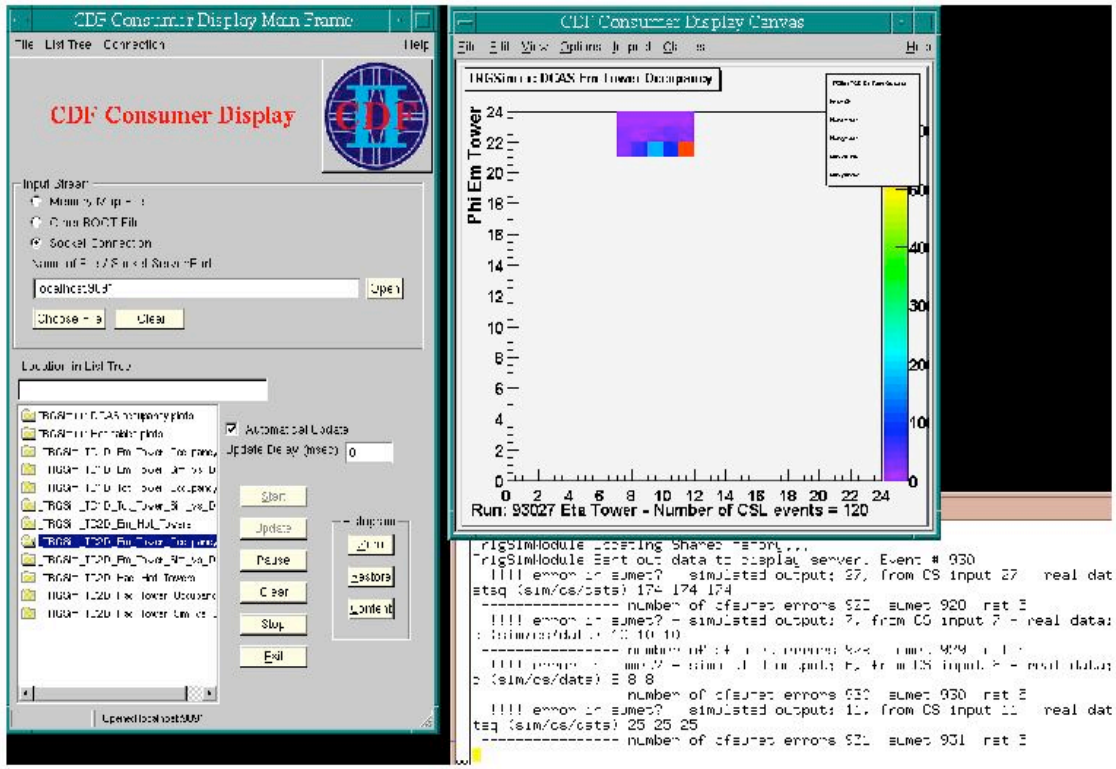

The Steady State

Simona Rolli
Tufts University

The Steady State

- People are migrating to the LHC [and other experiments]
  - This is not new, started a long time ago

- CDF has taken many measures to mitigate the impact on the experiment
  - We have stabilized, streamlined and automated many tasks in operations and in physics analysis

Among these:

- Common Ntuples
- Calibration Tasks
- Efficiencies and Scale Factors

Simona Rolli
Tufts University

PerfIDia (Performance and ID instant answer)

We want to have most of analysis infrastructure at CDF running in an automatic way to guarantee smooth running in the final years of the experiment

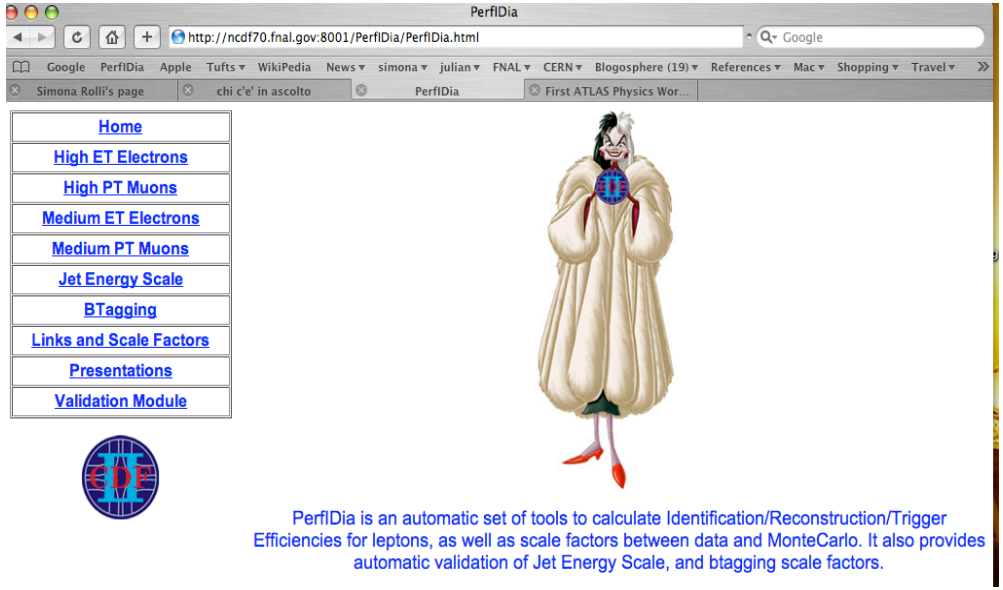

Several aspects of almost all analyses are in common:
Lepton ID efficiency,
Reconstruction,trigger
Jet Energy corrections
B-tagging Scale factors
Tau reconstruction
……

We are providing a common software framework which incorporates all the relevant piece of code and produces output tables, plots and documentation on the web for every new batch of processed data.
One coordinator (S.R.) and several experts on call.

Simona Rolli
Tufts University

Current Development

- All the code is maintained in one common place (CVS repository)
- TopNt and StNtuple are produced shortly after Production data is available (~4-6 weeks)
- The ID code is launched to validate the new ntuples and determine the various efficiencies and SF
  - Dependency on several tasks:
    - Good Run List
    - Skimmed Data (to avoid large volumes of files)
    - ...
- PerfIDia is also a tool to check data stability
- Output is posted as plots and tables on the PerfIDia web page
- Joint Physics group does the final sign off

Simona Rolli
Tufts University

Example: Electron ID

PerflDia

http://ncdf70.fnal.gov:8001/PerflDia/PerflDia.html

Google Scroogle Apple PerflDia Tufts WikiPedia News simona julian FNAL CERN Blogosphere (3) References Mac Shopping Travel Physic

Observation of... | List of Registe... | PerflDia | PPC2008: 2ND ... | CDF Fast Navi... | chris hays cdf ... | Fermilab – Joi... | CDF Fast Navi... | Chris Ha

- Home
- High ET Electrons
- High PT Muons
- BMU Muons
- Jet Energy Scale
- BTagging
- Joint Physics SF and Efficiency Spreadsheet
- Presentations
- Links
- Validation Page
- Old Validation Module

- Documentation:
  - CDF Note 9148, Dec 2007, P9 to P12 Electron ID and SF
  - CDF Note 8614, November 27, 2006, 1 fb data
  - CDF Note 8274, June 1st, 2006, Mesurement Method
- Code:
  - Instructions on how to run the code
- Results:
  - Period 17 data: Runs 258880-261005 (MC sample zetkei):
    - Plots
    - Efficiencies and Scale Factors for data and MC
  - Period 16 data: Runs 256840-258787 (MC sample zetkei):
    - Plots
    - Efficiencies and Scale Factors for data and MC
  - Period 15 data: Runs 254800-256824 (MC sample zetkei):
    - Plots
    - Efficiencies and Scale Factors for data and MC
  - Period 14 data: Runs 252836-254686 (MC sample zetkei):
    - Plots
    - Efficiencies and Scale Factors for data and MC
  - Period 13 data: Runs 241665-246231 (MC sample zewke):
    - Plots
    - Efficiencies and Scale Factors for data and MC
  - Period 12 data: Runs 237850-241664 (MC sample zewkeh):
    - Mass distributions with comparisons between data and MC
    - Efficiencies and Scale Factors for data and MC (file not formatted!)
    - Efficiencies and Scale Factors for data and MC at large ETA (eta < 2.8) (file not formatted!)
  - Period 11 data: Runs 233133 to 237795 (MC sample zewkcd - newly reprocessed as zewkee):
    - Mass distributions with comparisons between data and MC
    - Efficiencies and Scale Factors for data and MC (file not formatted!)
    - Efficiencies and Scale Factors for data and MC at large ETA (eta < 2.8) (file not formatted!)
  - Period 10 data: Runs 228664 to 233111 (MC sample Zemted)
  - Period 9 data : Runs 222529 to 228596 (MC sample zewkcd - newly reprocessed as zewkmd):
    - Mass distributions with comparisons between data and MC
    - Efficiencies and Scale Factors for data and MC (file not formatted!)
    - Efficiencies and Scale Factors for data and MC at large ETA (eta < 2.8) (file not formatted!)
  - Post ShutDown data (June 2006 to September 2006): Runs 217990 to 222426 (MC sample zewkcd):
    - Mass distributions with comparisons between data and MC
    - Efficiencies and Scale Factors for data and MC (file not formatted!)

Simona Rolli
Tufts University

Example: Electron ID

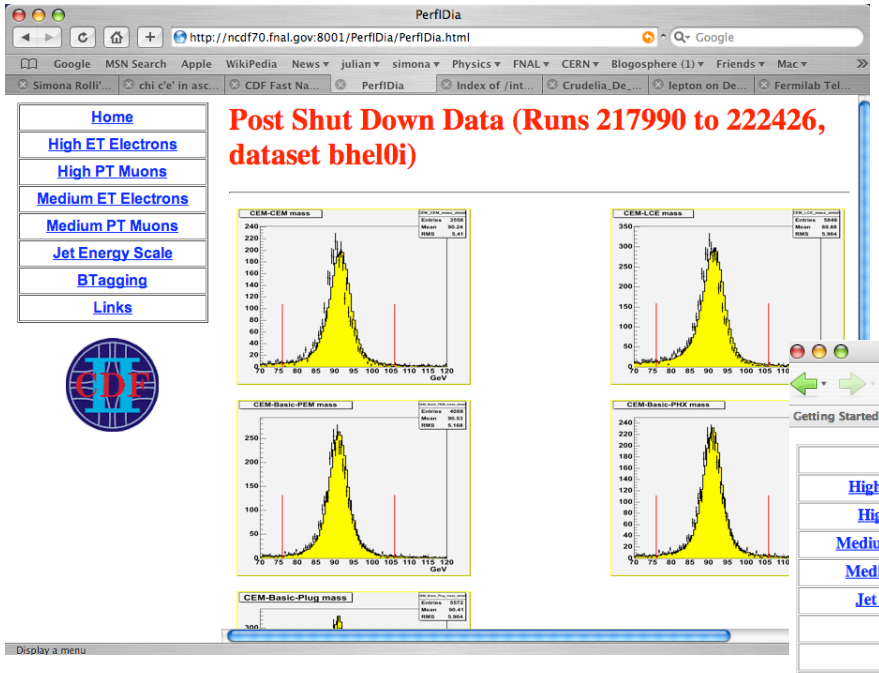

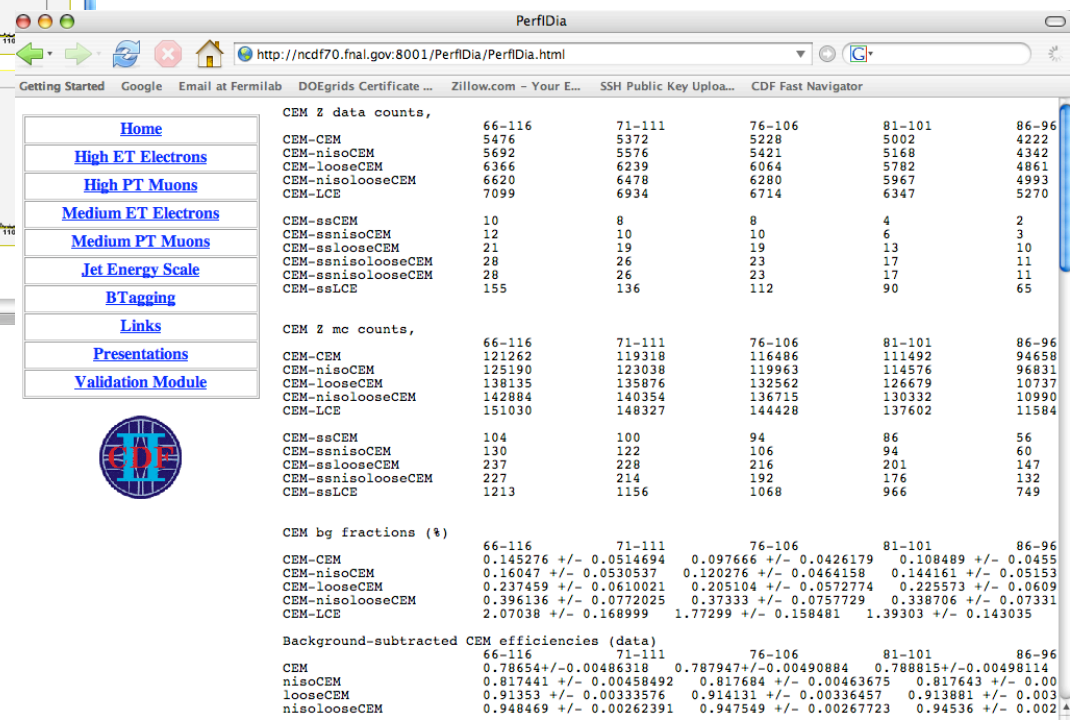

CEM Z data counts,

	66-116	71-111	76-106	81-101	86-96
CEM-CEM	5476	5372	5228	5002	4222
CEM-nisoCEM	5692	5576	5421	5168	4342
CEM-looseCEM	6366	6239	6064	5782	4861
CEM-nisolooseCEM	6620	6478	6280	5967	4993
CEM-LCE	7099	6934	6714	6347	5270
CEM-ssCEM	10	8	8	4	2
CEM-ssnisoCEM	12	10	10	6	3
CEM-sslooseCEM	21	19	19	13	10
CEM-ssnisolooseCEM	28	26	23	17	11
CEM-ssnisolooseCEM	28	26	23	17	11
CEM-ssLCE	155	136	112	90	65

CEM Z mc counts,

	66-116	71-111	76-106	81-101	86-96
CEM-CEM	121262	119318	116486	111492	94658
CEM-nisoCEM	125190	123038	119963	114576	96831
CEM-looseCEM	138135	135876	132562	126679	10737
CEM-nisolooseCEM	142884	140354	136715	130332	10990
CEM-LCE	151030	148327	144428	137602	11584
CEM-ssCEM	104	100	94	86	56
CEM-ssnisoCEM	130	122	106	94	60
CEM-sslooseCEM	237	228	216	201	147
CEM-ssnisolooseCEM	227	214	192	176	132
CEM-ssLCE	1213	1156	1068	966	749

CEM bg fractions (%)

	66-116	71-111	76-106	81-101	86-96
CEM-CEM	0.145276 +/- 0.0514694	0.097666 +/- 0.0426179	0.108489 +/- 0.0455		
CEM-nisoCEM	0.16047 +/- 0.0530537	0.120276 +/- 0.0464158	0.144161 +/- 0.05153		
CEM-looseCEM	0.237459 +/- 0.0610021	0.205104 +/- 0.0572774	0.225573 +/- 0.0609		
CEM-nisolooseCEM	0.396136 +/- 0.0772025	0.37333 +/- 0.0757729	0.338706 +/- 0.07331		
CEM-LCE	2.07038 +/- 0.168999	1.77299 +/- 0.158481	1.39303 +/- 0.143035		

Background-subtracted CEM efficiencies (data)

	66-116	71-111	76-106	81-101	86-96
CEM	0.78654+/-0.00486318	0.787947+/-0.00490884	0.788815+/-0.00498114		
nisoCEM	0.817441 +/- 0.00458492	0.817684 +/- 0.00463675	0.817643 +/- 0.00		
looseCEM	0.91353 +/- 0.00333576	0.914131 +/- 0.00336457	0.913881 +/- 0.003		
nisolooseCEM	0.948469 +/- 0.00262391	0.947549 +/- 0.00267723	0.94536 +/- 0.002		

Conclusions

As a "software person", during the lifecycle of CDFII, I have faced various aspects of software projects:

- Exposure to new technologies
  - New languages, new data access solutions, possibly commercial
- Involvement in long deliverable projects
  - The Trigger Simulation project was a complex project, vital for the rest of the experiment and involving several people at various stages
- Inventiveness
  - evtNtuple was a way to provide early data analyzers with a simple tool, easily portable outside of the more complex, still evolving software framework
- Help and Support
  - PerflDia

Some more personal conclusions

I definitely had a terrific time while at FNAL, from the hustle and bustle of the beginning of CDF Run II to its current *mature* state.

- **Some people call it service work, for me it was an opportunity to learn new things while actually having fun**
  - **…the hours spent in the control room during the commissioning run ..**
- **I came to appreciate "technical" work more and more as I found it more rewarding than the elusive search for the God's particle..**
  - **…end of the day satisfaction for debugging that nasty line of code…**
- **Sense of team work and accomplishments has been invaluable**

Backup Slides

MuonTrigger

Detector	Basic Unit	Unit	CARD	Algorithm Description	# Outputs
CMU	Wire pair	1.25°	MUIT	Hi, low P_t, plus a "lefover to 384ns" determined from differential timing	288 x 2 x 2 $\phi \times \eta \times P_t$
CMP	4 tube stack	0.6° 1.2°	MPIT	2 or 3 out of 4 hits for patterns from radial tracks	336 ϕ
CMX	Wire pair	1.25°	MXIT	Hi, low P_t, plus a "lefover to 384ns" determined from differential timing	288 x 2 x 2 $\phi \times \eta \times P_t$
CSX	Coincidence	15°/8	MSIX	Gated Mean Time from 1/2 overlapped scintillators	192 x 2 $\phi \times \eta$
CSP	Scintillator	1.2° 2.4°	MSIP	Gated Scintillator hit	168 x 2 $\phi \times \eta$
HAD	Calorimeter	15°	MHIT	Signal in calorimeter PMT for η intervals 0/4, 4/5 and 6/9	24 x 6 $\phi \times \eta$

Table 12.2: The muon primitives produced for each of the central muon detectors.

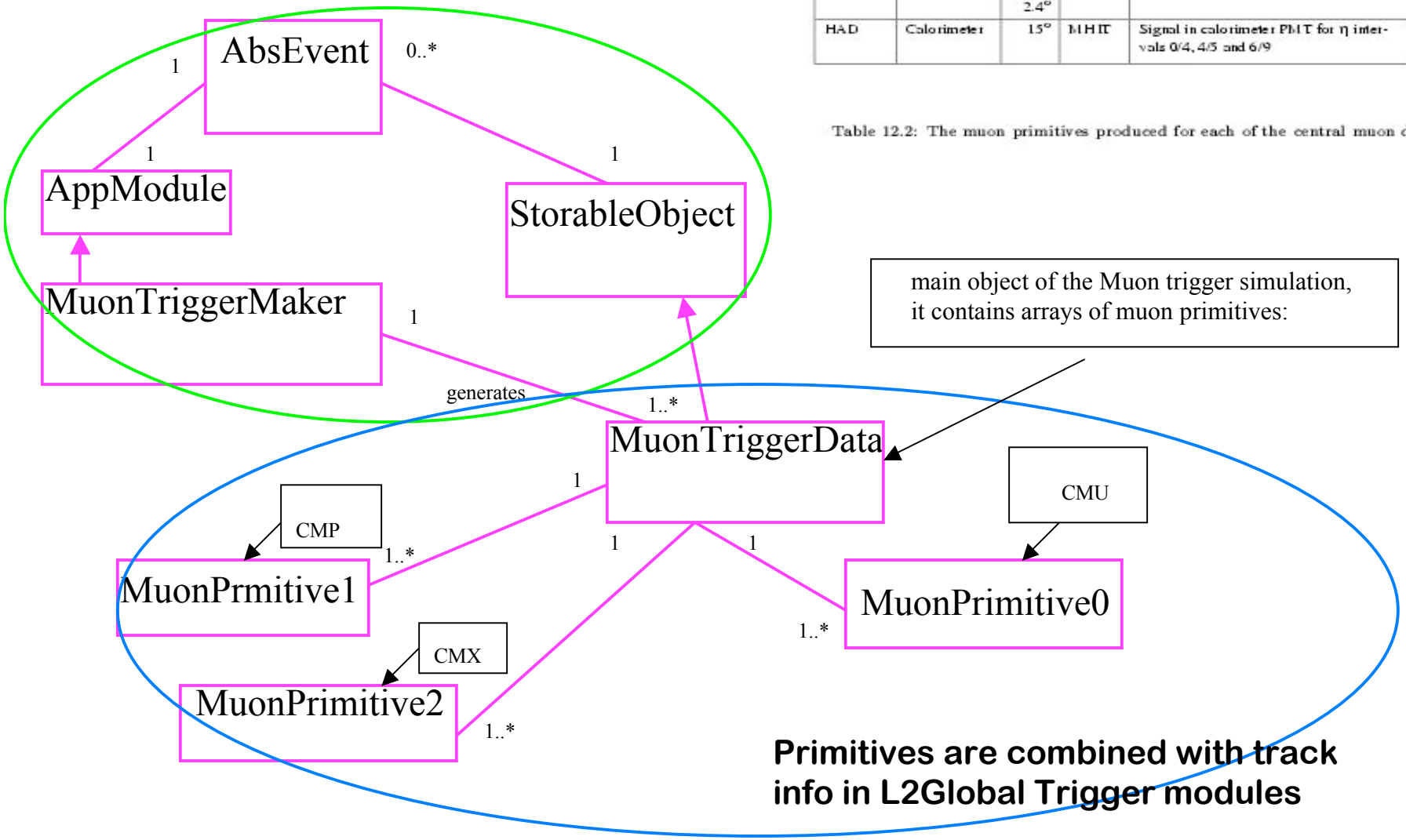

Primitives are combined with track info in L2Global Trigger modules

Simona Rolli
Tufts University

L1 Calo Trigger

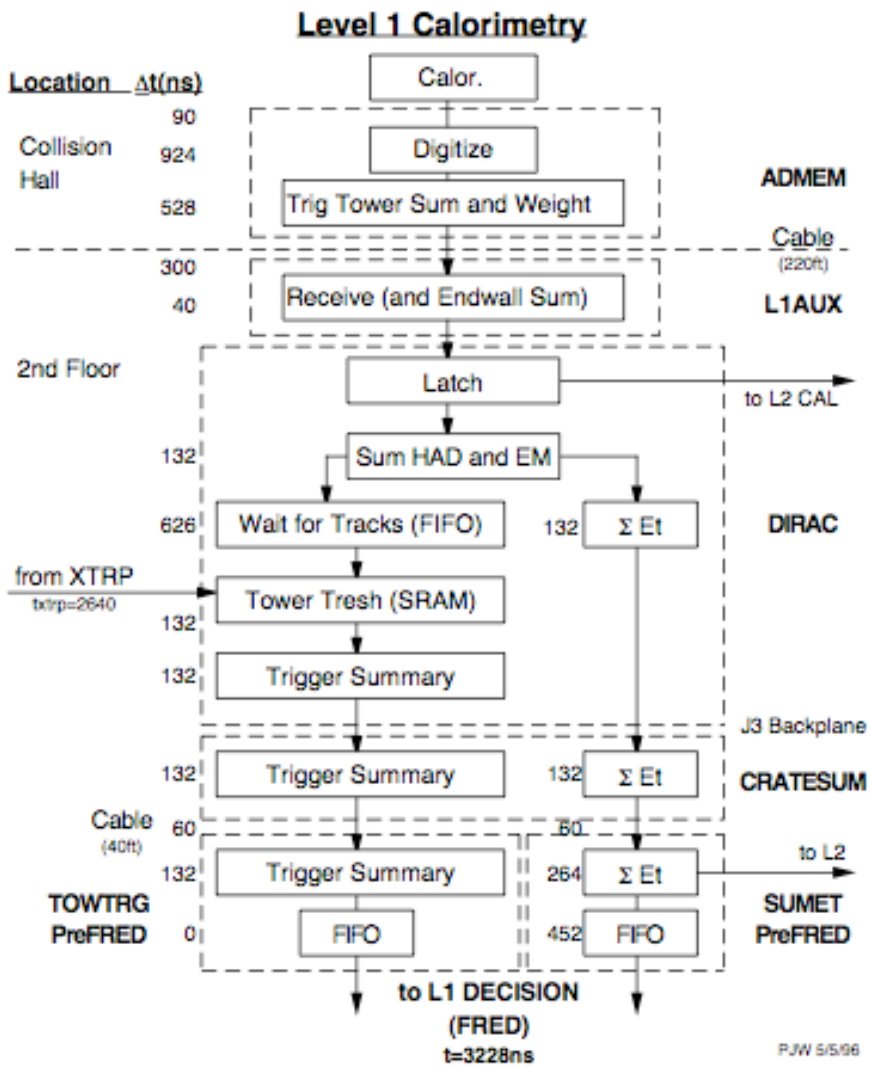

This is a block diagram of the L1 calorimeter trigger

- The dashed lines indicates different cards

L1 has a 5.5μs latency (42 bunch crossings at 132 ns)

Most of the decision occur in O(ns) time

Many of the boards functionality have been emulated with simple bit manipulating routines:

- ADMEM card functionality has been implemented as part of the TriggerTower objects

DIRAC and CrateSum board have been emulated as from the online control code

Simona Rolli
Tufts University

L1 Calorimeter

Information from the tracker is used in the L1 calorimeters decision. Eight bits per 15° in φ are received through a front panel connector from XFT via the XTRP board -8 bits refer to 8 thresholds in the XTRP board

The 8 bits are sent to three SRAMs that decode the information into 3 bits per trigger tower

DIRAC can decode the information regardless of the meaning of the triggers used to setup the thresholds (set the 8 bits)

The same data is sent to each DIRAC card on a ϕ slice. For a crate there are 32 (4x8) bits from XTRP per wedge. The information arrives at a time $t_{tracking}$ after the bunch crossing

The ELPD chips resident on DIRAC are reprogrammable via the ALTERA in-system programmability

Pin	Signal	Pin	Signal
1	Bit 0-	2	Bit 0+
3	Bit 1-	4	Bit 1+
5	Bit 2-	6	Bit 2+
7	Bit 3-	8	Bit 3+
9	Bit 4-	10	Bit 4+
11	Bit 5-	12	Bit 5+
13	Bit 6-	14	Bit 6+
15	Bit 7-	16	Bit 7+

Front Panel Connector 4 – Tracking Bits.

Simona Rolli
Tufts University

Diagrams for DIRAC

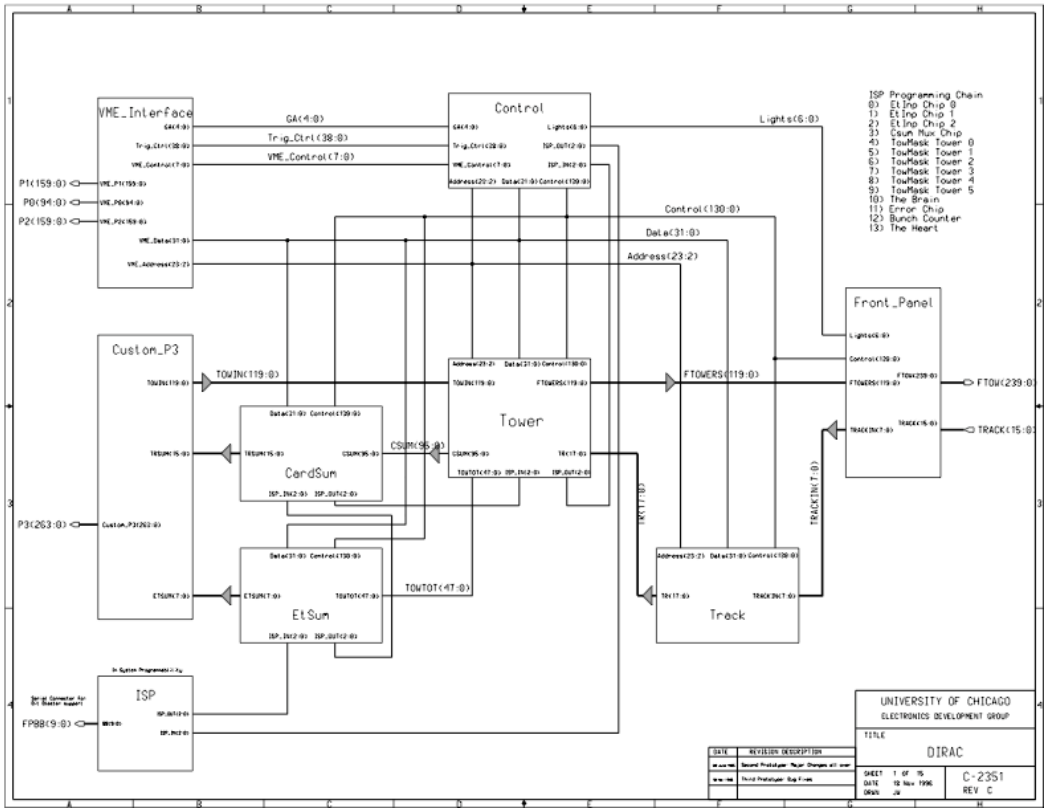

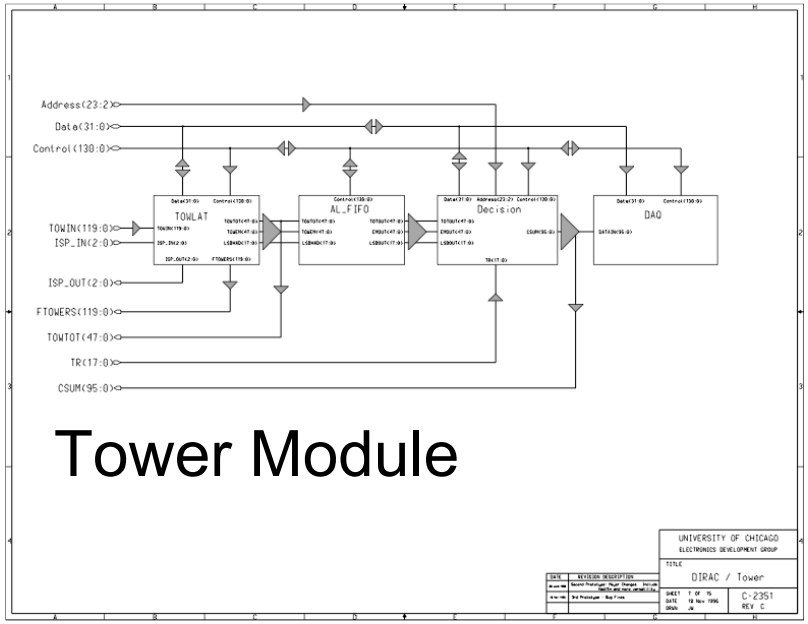

Tower Module

Simona Rolli
Tufts University

The Tower Module

The 20 bits of energy in each tower come through the custom P3 module with transverse energy and pedestal already subtracted. The 20 bits are divided in 10 bits of EM and 10 bits of HAD. One count corresponds to 125 MeV (FS 128 GeV).

These signals are grouped into a 120 bit bus (**TOWIN: 119-0**) and the bus is fanned out in 6 segments and routed to the **TOWLAT** section within the Tower module.

The TOWLAT contains 6 ELPD chips which latch the input energies at a time $t_{Calorimter}$. Each chip represents a trigger tower, receiving 10 bits of EM and 10 bits of HAD data. Ability to mask off a tower is provided (The masked tower will contribute 0 energy)
Via the **FTOWERS(119:0)** bus the two 10-bit energies are sent to L2 boards.

8 of the 10 EM bits are used in a later L1 decision (via **TOWEM(47:0)** bus)

The choice of which 8 bits are used is determined by the state of the Tower Granularity bit in the control registers.

A crude measure of the hadron energy is provided by **LSBHAD(17:0),** using the 3 or next to three LSBs (choice regulated by another bit in the control registers). These bits are used to make a rough cut on the hadron energy in a tower for electron triggers.

The two 10 bits data words input to TOWLAT are summed into an 8 bit work which is the total energy of the trigger tower (in case of overflow, all the bits are turned on, ie full scale)
TOWTOT(47:0) is the collection of all the 6 chips total energies.

TOWTOT, TOWEM, LSBHAD are fed to the AL_FIFO section for time alignment with the tracking bits
The outoup is **TOTOUT, EMOUT and LSBOUT** are sent to the **Decision** section.

Simona Rolli
Tufts University

DIRAC Decisions

The outputs from AL_FIFO are sent to the Decision section
Decision also accepts an 18 bits but (TR(17:0)) from the track section

Twelve (EM+TOT) SRAM's receives the 4 busses and make the trigger decision

For each trigger, one SRAM looks at the TOWTOT and TR and generates the 8 jet triggers decisions. The other SRAM generates the eight electromagnetic trigger decisions. These decision are combined into the CSUM(95:0) bus.
There are 16 decisions per trigger tower for a total of 96 bits. However there are only 13 L1 trigger bits available for global decision, so the reduction from 16 to 13 is done in the CSUM section.
The CSUM is sent to two modules: CardSum and DAQ.
In DAQ the events are stored while waiting for the L2 decision.

Simona Rolli
Tufts University

Silicon Vertex Trigger at Level 2

- **At trigger level 2 in ~10 ms from digitized silicon hits tracks are reconstructed by pattern recognition. Track parameter (IP, PT, f) are calculated with almost offline efficiency:**

σ_d = 35 μm (at p_T = 2 GeV/c)
σ_ϕ = 1 mrad
σ_{pT} = 0.003p_T (p_T in GeV/c)
ε ~ 97 % (for 4 hits tracks)

beam profile

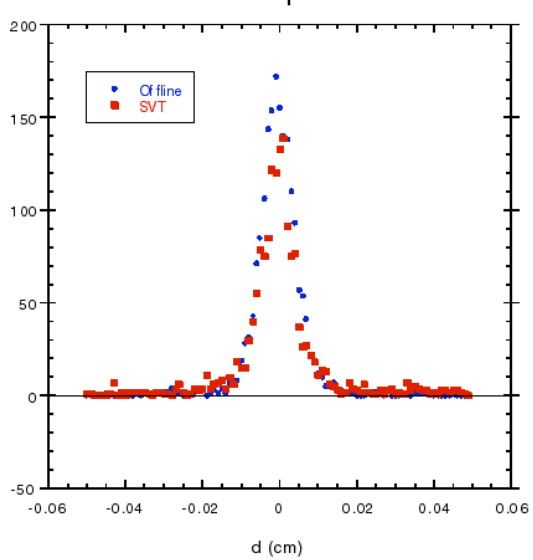

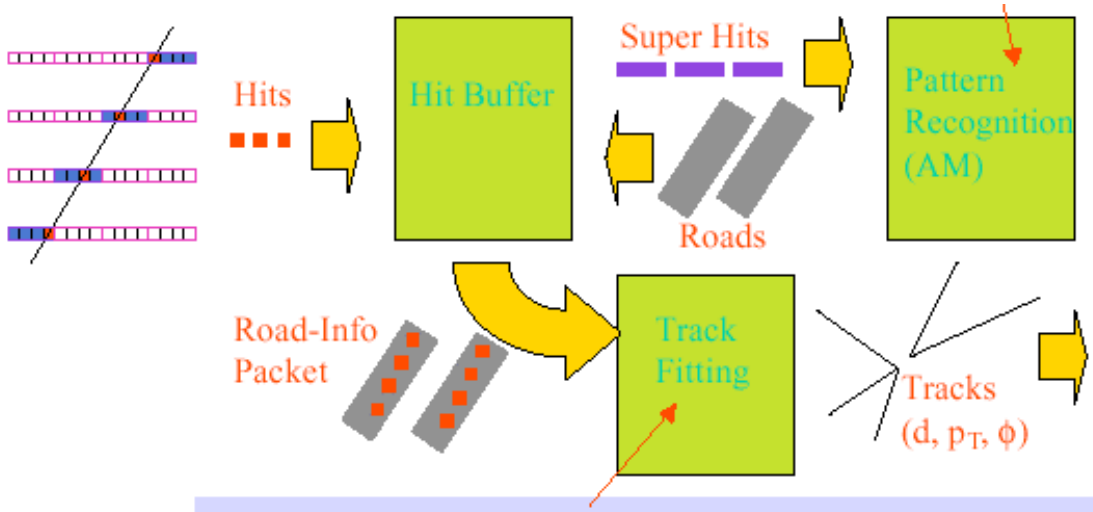

Fast track fitting with linear approximation
using full resolution of the silicon vertex detector

● ***Allows Level 2 trigger on impact parameter and secondary vertexing.***

Simona Rolli
Tufts University

Trigger Data Flow

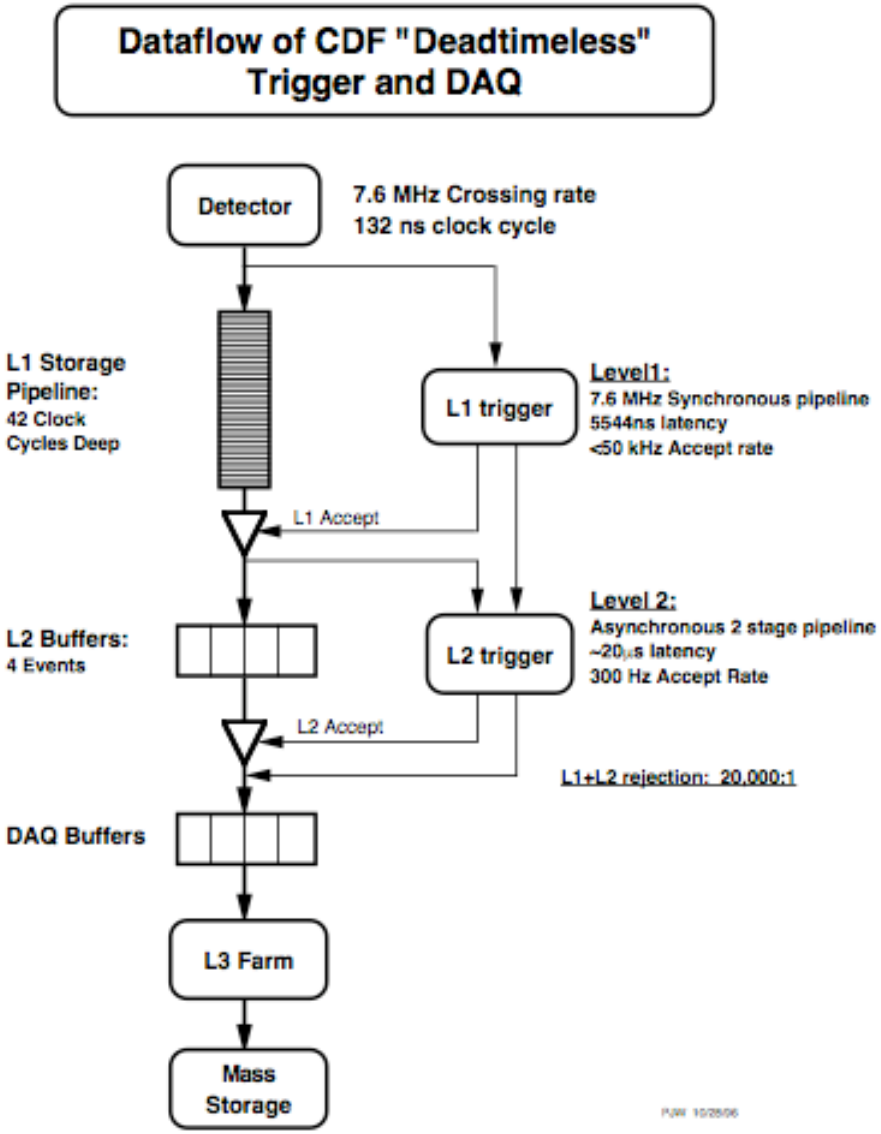

Figure 11.1 shows the functional block diagram of the readout electronics. To accommodate a 132 nsec bunch-crossing time and a 5.5 μsec decision time for the first trigger level, all front-end electronics are fully pipelined, with on-board buffering for 42 beam crossings. Data from the calorimeters, the central tracking chamber, and the muon detectors are sent to the Level-1 trigger system, which determines whether a $\bar{p}p$ collision is sufficiently interesting to hold the data for the Level-2 trigger hardware. The Level-1 trigger is a synchronous system with a decision reaching each front-end card at the end of the 42-crossing pipeline. Upon a Level-1 trigger accept, the data on each front-end card are transferred to one of four local Level-2 buffers. The second trigger level is an asynchronous system with an average decision time of 20 μsec.

A Level-2 trigger accept flags an event for readout. Data are collected in DAQ buffers and then transferred via a network switch to a Level-3 CPU node, where the complete event is assembled, analyzed, and, if accepted, written out to permanent storage. These events can also be viewed by online monitoring programs running on other workstations.